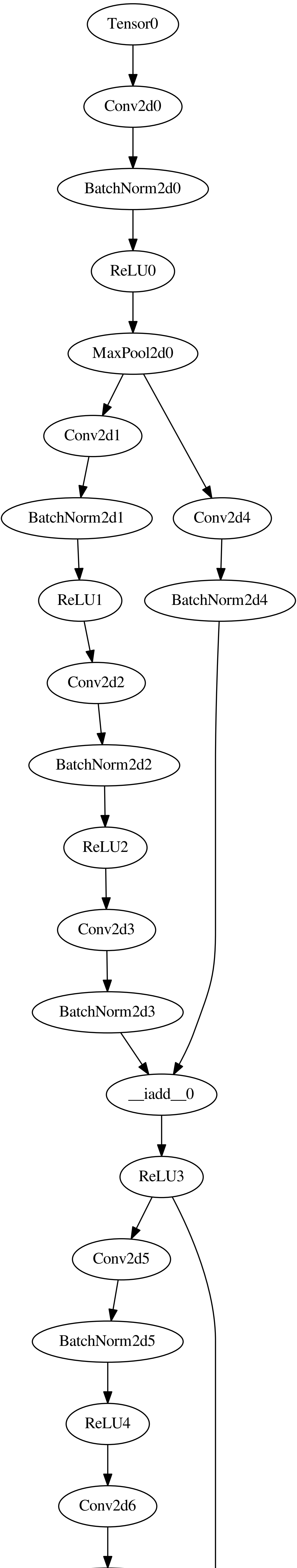
Tensor0
Conv2d0
BatchNorm2d0
ReLU0
MaxPool2d0
Conv2d1
BatchNorm2d1
Conv2d4
ReLU1
BatchNorm2d4
Conv2d2
BatchNorm2d2
ReLU2
Conv2d3
BatchNorm2d3
__iadd__0
ReLU3
Conv2d5
BatchNorm2d5
ReLU4
Conv2d6

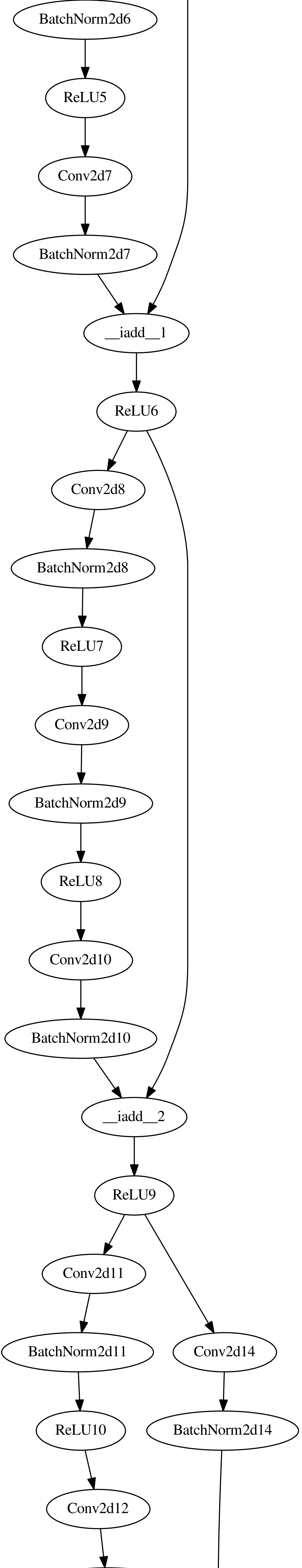
BatchNorm2d6
ReLU5
Conv2d7
BatchNorm2d7
__iadd__1
ReLU6
Conv2d8
BatchNorm2d8
ReLU7
Conv2d9
BatchNorm2d9
ReLU8
Conv2d10
BatchNorm2d10
__iadd__2
ReLU9
Conv2d11
Conv2d14
BatchNorm2d11
BatchNorm2d14
ReLU10
Conv2d12

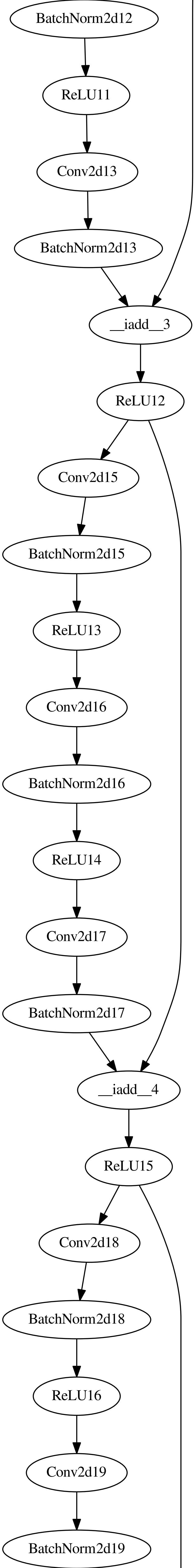
BatchNorm2d12
ReLU11
Conv2d13
BatchNorm2d13
__iadd__3
ReLU12
Conv2d15
BatchNorm2d15
ReLU13
Conv2d16
BatchNorm2d16
ReLU14
Conv2d17
BatchNorm2d17
__iadd__4
ReLU15
Conv2d18
BatchNorm2d18
ReLU16
Conv2d19
BatchNorm2d19

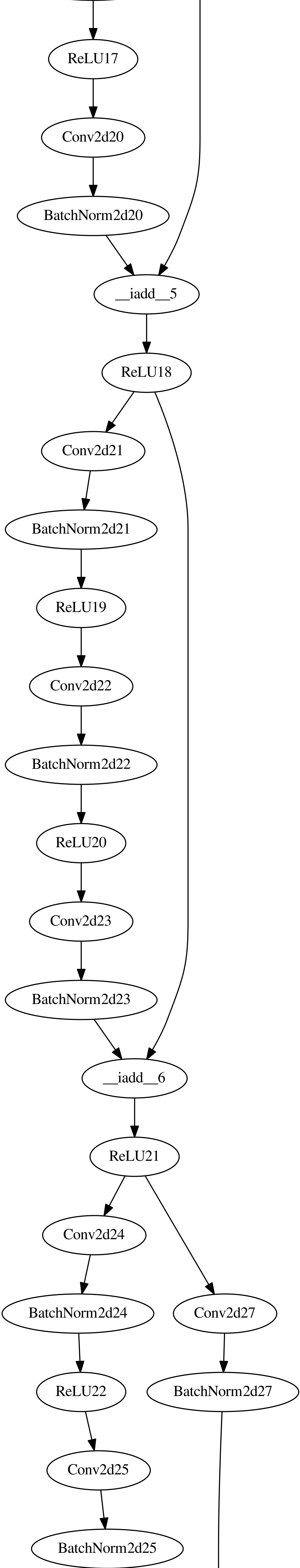
ReLU17
Conv2d20
BatchNorm2d20
__iadd__5
ReLU18
Conv2d21
BatchNorm2d21
ReLU19
Conv2d22
BatchNorm2d22
ReLU20
Conv2d23
BatchNorm2d23
__iadd__6
ReLU21
Conv2d24
Conv2d27
BatchNorm2d24
BatchNorm2d27
ReLU22
Conv2d25
BatchNorm2d25

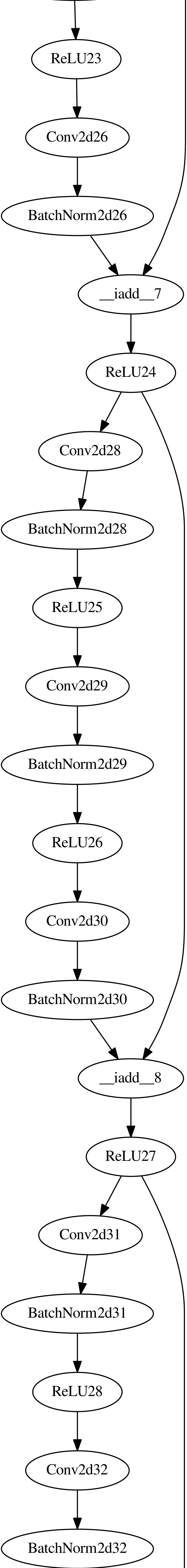
ReLU23
Conv2d26
BatchNorm2d26
__iadd__7
ReLU24
Conv2d28
BatchNorm2d28
ReLU25
Conv2d29
BatchNorm2d29
ReLU26
Conv2d30
BatchNorm2d30
__iadd__8
ReLU27
Conv2d31
BatchNorm2d31
ReLU28
Conv2d32
BatchNorm2d32

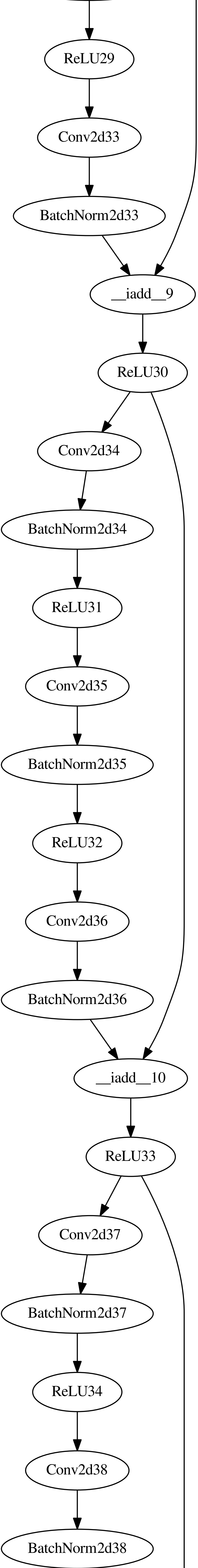
ReLU29
Conv2d33
BatchNorm2d33
__iadd__9
ReLU30
Conv2d34
BatchNorm2d34
ReLU31
Conv2d35
BatchNorm2d35
ReLU32
Conv2d36
BatchNorm2d36
__iadd__10
ReLU33
Conv2d37
BatchNorm2d37
ReLU34
Conv2d38
BatchNorm2d38

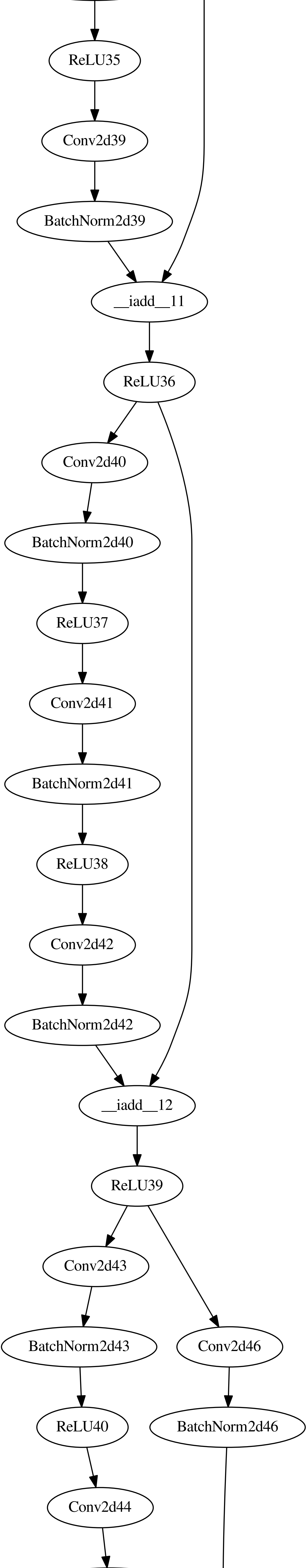
ReLU35
Conv2d39
BatchNorm2d39
__iadd__11
ReLU36
Conv2d40
BatchNorm2d40
ReLU37
Conv2d41
BatchNorm2d41
ReLU38
Conv2d42
BatchNorm2d42
__iadd__12
ReLU39
Conv2d43
Conv2d46
BatchNorm2d43
BatchNorm2d46
ReLU40
Conv2d44

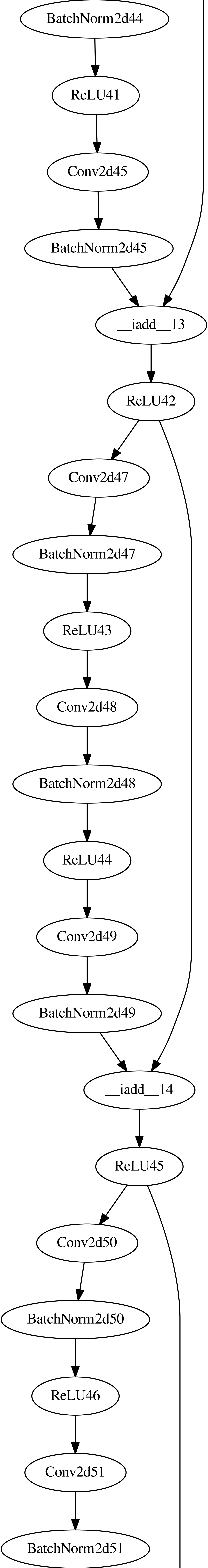
BatchNorm2d44
ReLU41
Conv2d45
BatchNorm2d45
__iadd__13
ReLU42
Conv2d47
BatchNorm2d47
ReLU43
Conv2d48
BatchNorm2d48
ReLU44
Conv2d49
BatchNorm2d49
__iadd__14
ReLU45
Conv2d50
BatchNorm2d50
ReLU46
Conv2d51
BatchNorm2d51

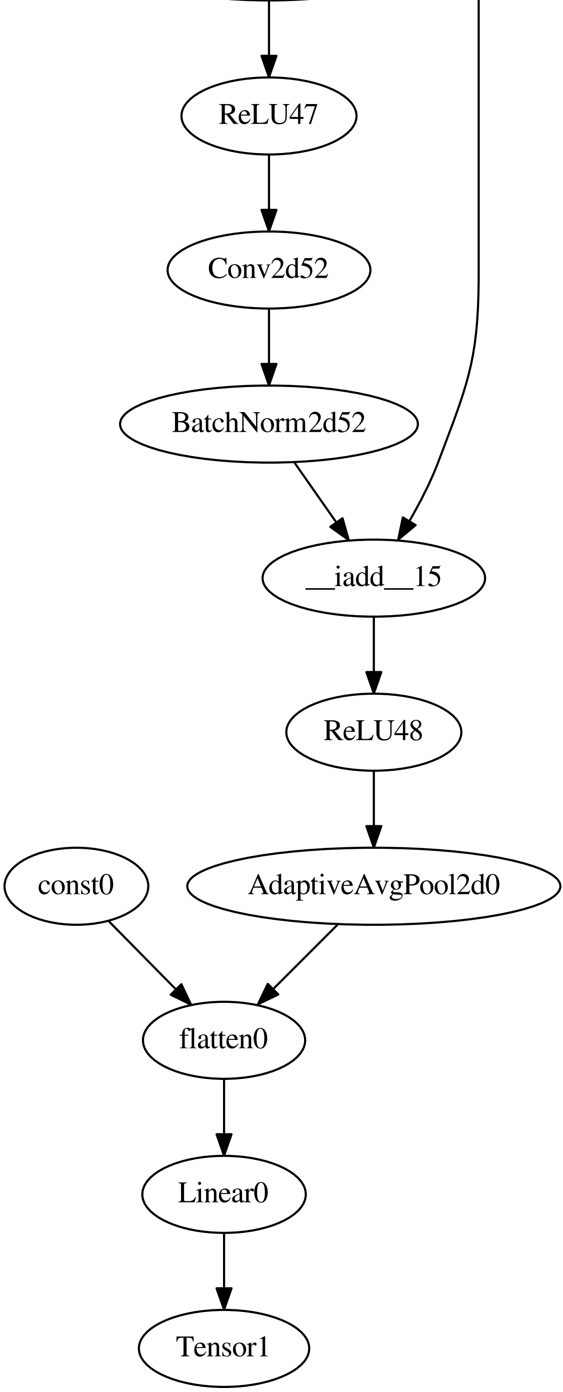
ReLU47
Conv2d52
BatchNorm2d52
__iadd__15
ReLU48
const0
AdaptiveAvgPool2d0
flatten0
Linear0
Tensor1